A1 SIZE – 594mm x 841mm

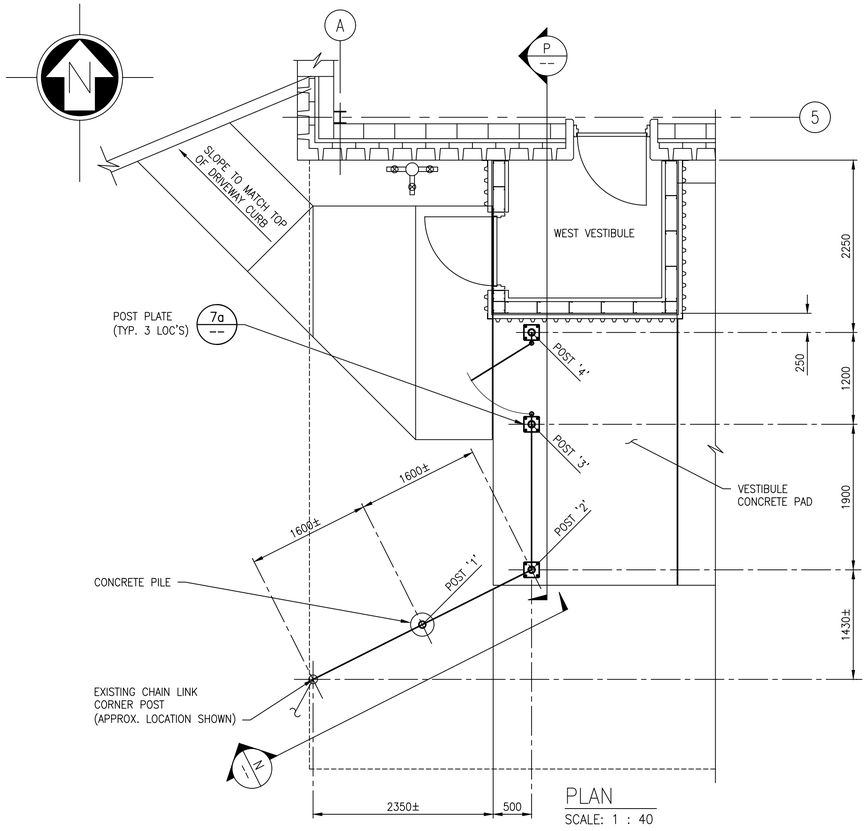

PLAN
SCALE: 1 : 40

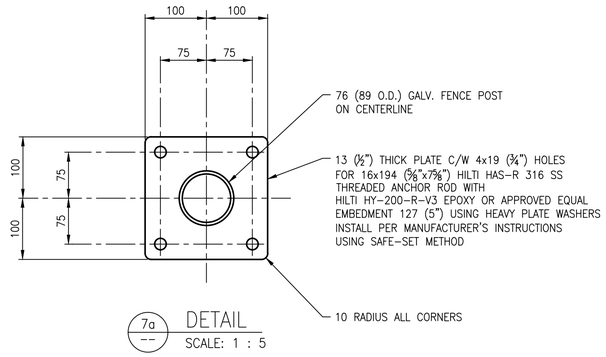

7a DETAIL
SCALE: 1 : 5

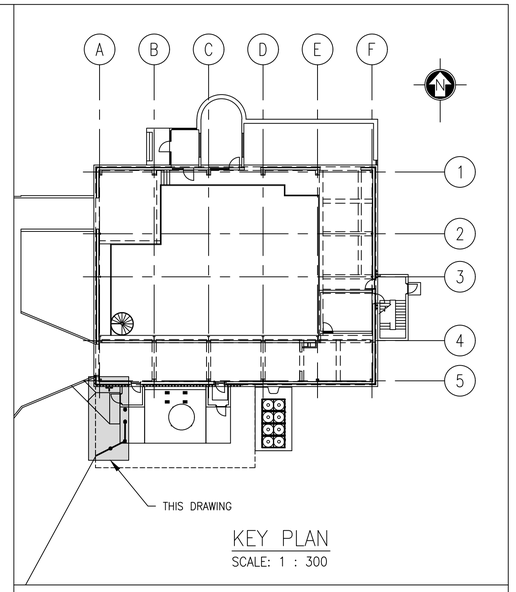

KEY PLAN
SCALE: 1 : 300

NOTES:

1. SEE DRAWING 1–0650M–S0023–001 & 1–0650M–S0023–002 FOR GENERAL NOTES.

7 DETAIL – CHAIN LINK FENCING
SCALE: 1 : 40

– SOURCE DWG. S0027 –

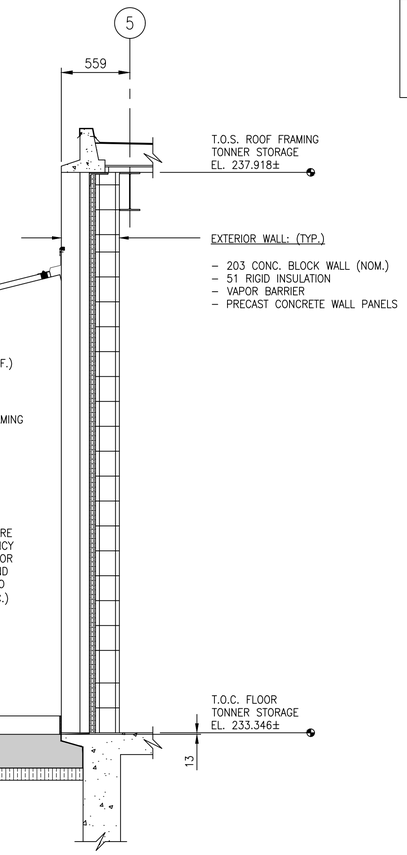

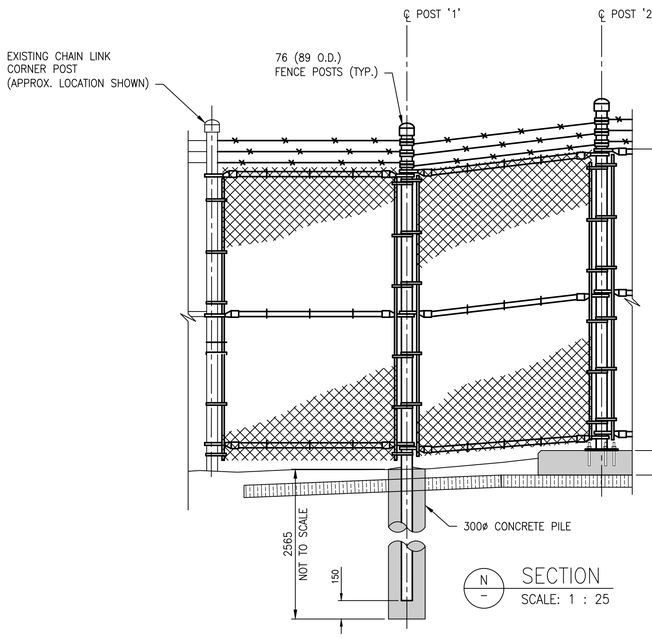

N SECTION
SCALE: 1 : 25

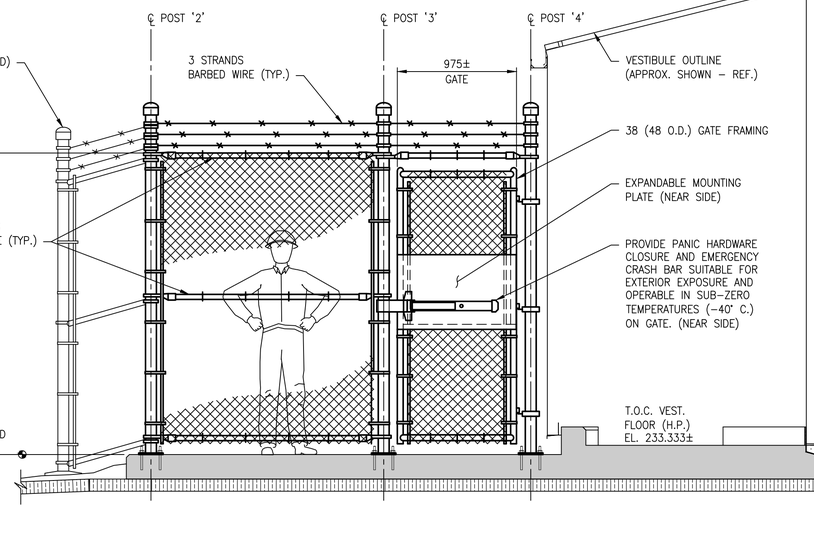

P SECTION
SCALE: 1 : 25

DRAWING NUMBER	REFERENCE DRAWINGS

METRIC
WHOLE NUMBERS INDICATE MILLIMETRES
DECIMALIZED NUMBERS INDICATE METRES

10m 5m 0 5m 10m 15m — 1 : 300
0.5 0 0.5 1m 1.5m — 1 : 25
1 0 1 2m — 1 : 40
125 0 125 250mm — 1 : 5

ENGINEERS GEOSCIENTISTS MANITOBA
Certificate of Authorization
AtkinsRéalis Canada Inc.
No. 4489

NO.	REVISIONS	DATE	DESIGN	CHECK
00	ISSUED FOR TENDER AND CONSTRUCTION	2025/04/30	KK	FM

AtkinsRéalis
148 Nature Park Way, Winnipeg, Manitoba
Canada R3P 0X7 204-786-8080

DESIGNED BY: K. KOTYK	CHECKED BY: F. MARSHALL
DRAWN BY: B. DICKSON	APPROVED BY: V. ELIMBAN
SCALE: AS SHOWN	ISSUED FOR CONSTRUCTION BY: M. SKINNER
DATE: 2023–10–30	DATE: 2025/04/30
CONSULTANT NO.: 694715	

ENGINEER'S SEAL
PROVINCE OF MANITOBA
K. K. KOTYK
Member
21950
REGISTERED PROFESSIONAL ENGINEER
2025-04-30 REV. 00

Winnipeg
THE CITY OF WINNIPEG
WATER AND WASTE DEPARTMENT

HURST PUMPING STATION
CHLORINE SYSTEM UPGRADE
STRUCTURAL
NEW WORKS – FENCING
PLAN, SECTIONS & DETAILS

CITY DRAWING NUMBER	SHEET	REV.	SIZE
1–0650M–S0028	001	00	A1

1–0650M–S0028–001–00.dwg

LAST SAVE: 2025/04/29 – 1:12pm
PATH: C:\Users\dickb\pdfs\1–0650M–S0028–001–00.dwg